Tunable Oscillator Triode

PENCIL TYPE WITH INTEGRAL RESONATORS

For Radiosonde Service at Frequencies between 1660 and 1700 Mc

GENERAL DATA

Electrical:

Heater, for Unipotential Cathode:		
Voltage range (AC or DC)	5.2 to 6.6▲	volts
Current at 6 volts	0.16	amp
Frequency (Approx.)	1680●	Mc
Tuning Range	1660 to 1700	Mc
RF Coaxial Output Terminal:		
Characteristic impedance (Approx.)	50	ohms
Tuning Screws (2):		
Maximum Torque (Absolute) at tuning-range stops	6.5	oz-in.

Mechanical:

Operating Position . . . . . Any
Dimensions . . . . . See *Dimensional Outline*
Tunable Resonators (2) . . . . . Integral part of tube
Weight (Approx.) . . . . . 0.8 oz
Terminal Connections (See *Dimensional Outline*):

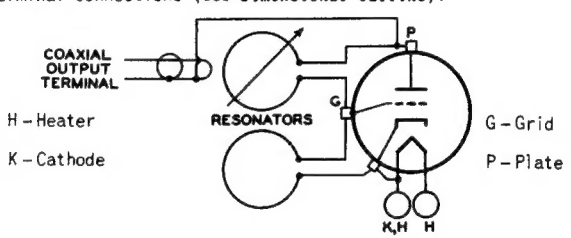

UHF OSCILLATOR — Class C

Maximum and Minimum Ratings, *Absolute-Maximum Values:*

At frequencies between 1660 and 1700 Mc and altitudes up to 100,000 feet

DC PLATE-TO-GRID VOLTAGE	130 max.	volts
DC PLATE CURRENT	34 max.	ma
DC GRID CURRENT	8 max.	ma
PLATE INPUT	4 max.	watts
PLATE DISSIPATION	3.6 max.	watts
AMBIENT-TEMPERATURE RANGE	-55 to +75	°C

Typical Operation as Cathode-Driven Oscillator:

At frequency of	*1660*	*1680*	*1700*	*Mc*
Heater Voltage	6	6	6	volts
DC Plate-to-Grid Voltage	124.5	124	123	volts

7533

At frequency of	*1660*	*1680*	*1700*	*Mc*
DC Cathode-to-Grid Voltage	7.5	6.75	6	volts
From grid resistor of	1500	1500	1500	ohms
DC Cathode Current	35	31.5	32	ma
DC Grid Current	5	4.5	6	ma
Useful Power Output (Approx.)	575	575	475	mw

Circuit Values:

Grid-Circuit Resistance	2400 max.	ohms
	1300 min.	ohms

▲ This range of heater voltage is for radiosonde applications in which the heater is supplied from batteries and in which the equipment design requirements of minimum size, light weight, and high efficiency are the primary considerations even though the average life expectancy of the 7533 in such service is only a few hours.

● As supplied, tubes are adjusted to 1680 ± 4 Mc.

CHARACTERISTICS RANGE VALUES FOR EQUIPMENT DESIGN

	Note	*Min.*	*Max.*	
Heater Current	1	0.135	0.157	amp
Grid Resistor	2	1300	2400	ohms
Useful Power Output (1)	3	250	–	mw
Plate Current (1)	4	–	34	ma
Useful Power Output (2)	5	250	–	mw
Plate Current (2)	6	–	34	ma
Useful Power Output (3)	7	270	–	mw

Note 1: With 5.2 volts on heater.

Note 2: With heater voltage of 6.6 volts, dc plate supply voltage of 117 volts, plate load resistor of 50 ohms, frequency adjusted to 1660 +3 -1 Mc., output VSWR of 1.1 maximum, and grid resistor adjusted to give plate current as close as possible to, but not exceeding 33 ma. Record Grid-Resistor value.

Note 3: With frequency and grid-resistor value of Note 2, decrease heater voltage and plate supply voltage to 5.2 volts and 95 volts, respectively, and measure Useful Power Output.

Note 4: With heater voltage of 6.6 volts, plate supply voltage of 117 volts, plate load resistor of 50 ohms, using same value of grid resistor as determined in Note 2, frequency adjusted to 1700 +1 -3 Mc., and output VSWR of 1.1 maximum.

Note 5: Same as Note 4, except heater voltage and plate supply voltage are 5.2 volts and 95 volts, respectively.

Note 6: Same as Note 4, except frequency is adjusted to 1680 ± 4 Mc with VSWR of 1.1 maximum.

Note 7: Same as Note 6, except heater voltage and plate supply voltage values are 5.2 volts and 95 volts, respectively.

SPECIAL TESTS & PERFORMANCE DATA

Low-Pressure Voltage Breakdown Test:

This test (similar to MIL-E-1D, paragraph 4.9.12.1) is performed on a sample lot of tubes from each production run. Tubes are tested in a chamber at an air pressure equivalent to an altitude of 100,000 feet. Arcing will not occur when an rms voltage of 200 volts is applied between the plate terminal and the grid terminal and heater-cathode terminal tied together.

High-Frequency Vibration Performance:

This test (similar to MIL-E-1D, paragraph 4.9.19.2) is performed on a sample lot of tubes from each production run. The tube is vibrated in two planes, parallel and perpendicular respectively to its axis, with no voltages applied to the tube. Vibration frequency is 50-to-60 cps and acceleration is 10 g. At the end of this test, tubes will not show temporary or permanent shorts or open circuits.

Shorts and Continuity Test:

This test (similar to MIL-E-1D, paragraph 4.7.5) is performed on all tubes from each production run. In this test, a tube is considered inoperative if it shows a permanent or temporary short or open circuit.

Temperature-Frequency Performance:

This test is performed on a sample lot of tubes from each production run to determine the ability of this tube type to maintain the oscillator frequency without significant change when ambient temperature and operating voltages are reduced gradually during a given time interval. Tube under test is operated with a heater voltage of 6.6 volts, dc plate supply voltage of 117 volts, plate load resistor of 50 ohms, oscillator frequency of 1680 ± 4 Mc, output VSWR of 1.1 maximum, dc plate current of not more than 34 ma. obtained by adjusting the value of the grid resistor between 1300 and 2400 ohms, and at an ambient temperature of approximately 22° C for a period of 5 minutes. Record Oscillator Frequency. The ambient temperature is then gradually reduced to -40° C during a 30-minute operating period. Both the heater voltage and plate supply voltage are reduced simultaneously so that during the final 15-minute interval of this test period the heater voltage is 5.2 volts and the plate supply, voltage is 95 volts. Any change in frequency will not be more than +4 Mc or -1 Mc from the recorded initial test value. The rate of frequency change during this test will not exceed 2 Mc in any 15-second interval.

5-Hour Radiosonde Life Performance:

This test is performed on a sample lot of tubes from each production run under conditions of maximum-rated plate dissipation to insure excellent performance in radiosonde applications. Each tube tested is operated for 5 hours under the following conditions: heater voltage of 6.6 volts, dc plate supply voltage of 117 volts, plate load resistor of 50 ohms, dc plate current of 34 ma., obtained by adjusting the grid-resistor value between 1300 and 2400 ohms, oscillator frequency of 1680 ± 4 Mc and output VSWR of 1.1 maximum. At the end of 5 hours, the tubes will not show permanent shorts or open circuits, and will meet the following limits:

Useful Power Output (3) . . . . . 210 min. mw

For conditions shown under *Characteristics Range Values, Notes* 6,7.

Change in Useful Power
Output (3) From Initial Value . . . . . 30 max. %
For conditions shown under *Characteristics Range Values, Notes 6,7.*

OPERATING CONSIDERATIONS

The *flexible heater leads* of the 7533 may be soldered to the circuit elements, but not closer than 3/4" from the surface of the glass button. Otherwise the heat of the soldering operation may crack the glass button and damage the tube.

Support for the 7533 should be provided by a suitable clamp around the metal shell of the tube, preferably in the indicated zone shown on the *Dimensional Outline.* Care must be taken to avoid clamping so tightly as to cause distortion of the resonator cavity with resultant change in operating frequency.

Connections to the grid terminal and to the plate terminal should be made by means of spring contacts only. Under no circumstances should connections be soldered to these terminals.

Accurate frequency adjustment in the 1660-to-1700-Mc operating range together with minimum frequency drift, may be obtained by using both tuning screws. Alternately turn each tuning screw not more than one-half turn at a time, in a clockwise direction to lower the frequency. Repeat this procedure until the desired lower frequency adjustment is reached. To reach a higher frequency, follow the same procedure except that the tuning screws are turned in a counterclockwise direction.

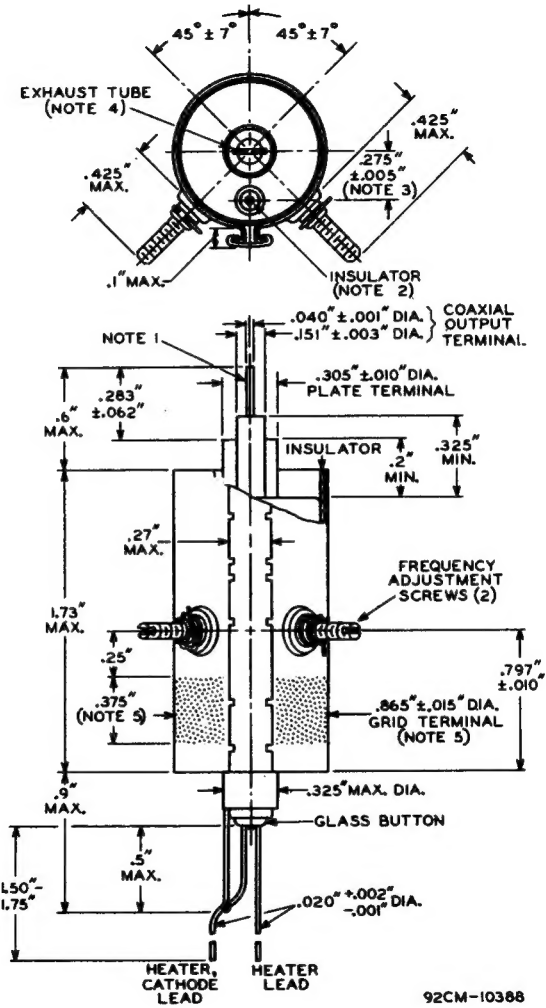
45° ± 7°
45° ± 7°
EXHAUST TUBE (NOTE 4)
.425" MAX.
.275" ±.005" (NOTE 3)
.425" MAX.
.1" MAX.
INSULATOR (NOTE 2)
.040" ±.001" DIA.
.151" ±.003" DIA.
COAXIAL OUTPUT TERMINAL
NOTE 1
.305" ±.010" DIA. PLATE TERMINAL
.283" ±.062"
.6" MAX.
INSULATOR
.2" MIN.
.325" MIN.
.27" MAX.
FREQUENCY ADJUSTMENT SCREWS (2)
1.73" MAX.
.25"
.797" ±.010"
.375" (NOTE 5)
.865" ±.015" DIA. GRID TERMINAL (NOTE 5)
.9" MAX.
.325" MAX. DIA.
GLASS BUTTON
.5" MAX.
1.50"-1.75"
.020" +.002" -.001" DIA.
HEATER, CATHODE LEAD
HEATER LEAD
92CM-10388

NOTE 1: THE AXES OF THE INNER AND OUTER CONDUCTORS OF THE COAXIAL OUTPUT TERMINAL COINCIDE WITHIN 0.010".

NOTE 2: THE END OF THE INSULATOR IN THE COAXIAL OUTPUT TERMINAL ALIGNS WITH THE EDGE OF THE OUTER CONDUCTOR (0.151" ± 0.003" DIAMETER) WITHIN 0.005".

NOTE 3: DISTANCE BETWEEN CENTER LINE OF PLATE TERMINAL AND CENTER LINE OF INNER CONDUCTOR (0.040" ± 0.001" DIAMETER).

NOTE 4: ORIENTATION OF PINCH-OFF IS NOT CONTROLLED.

NOTE 5: STIPPLED REGION (WHICH EXTENDS AROUND TUBE) INDICATES RECOMMENDED CLAMPING AND CONTACT AREA.